BD|SENSORS
pressure measurement

DPS 200



Differential Pressure Transmitter for Gas and Compressed Air

Applications:

- for HVAC-applications

Characteristics:

- piezoresistive silicon sensor
- differential pressure range 6 ... 1000 mbar

Technical Data

Input pressure range												
Nominal pressure P_N [mbar] (differential, gauge pressure)	6	10	16	25	40	60	100	160	250	400	600	1000
Max. static pressure [mbar]	200	345	345	345	345	345	345	1000	1000	3000	3000	3000

Output signal / Supply		
Standard	3-wire: 0 ... 10 V	V_S = 19 ... 32 V_{DC}
Option	2-wire: 4 ... 20 mA 3-wire: 4 ... 20 mA	V_S = 11 ... 32 V_{DC} V_S = 19 ... 32 V_{DC}
Performance		
Accuracy [1]	≤ ± 2 % FSO	
Permissible load	current 2-wire: R_{max} = [(V_S - V_{Smin}) / 0,02 A] Ω current 3-wire: 330 Ω	voltage 3-wire: 10 kΩ
Influence effects	supply: ≤ ± 0.1 % FSO/10V	load: ≤ ± 0.1 % FSO/kΩ
Response time (0 ... 100%)	2-wire: adjustable by potentiometer in the range of 500 msec up to 2.5 sec 3-wire: adjustable by potentiometer in the range of 50 msec up to 2.5 sec	
Long term stability	≤ ± 0.5 % FSO / year at reference conditions	
Measuring rate	2-wire: 8 Hz	3-wire: 1 kHz
[1] accuracy according to IEC 61298-2 – limit point adjustment (non-linearity, hysteresis, repeatability)		
Thermal effects (offset and span)		
Thermal error	≤ ± 0.3 % FSO / 10 K (typ.) in compensated range 0 ... 50 °C	
Permissible temperatures		
Medium	0 … 50°C	
Electronics / environment	0 … 50°C	
Storage	-10 … 70°C	
Electrical protection		
Short-circuit protection	permanent	
Reverse polarity protection	no damage, but also no function	
Electromagnetic protection	emission and immunity according to EN 61326	
Materials		
Pressure port	brass nickel plated	
Housing	ABS	
Sensor	ceramic, silicon, epoxy, RTV	
Media wetted parts	pressure port, PVC / silicone tube, sensor	

BD SENSORS GmbH
BD-Sensors-Straße 1
D - 95199 Thierstein

Tel.: +49 (0) 92 35 / 98 11- 0
Fax: +49 (0) 92 35 / 98 11- 11

www.bdsensors.de
info@bdsensors.de

Miscellaneous	
LC-Display (optional)	visible range 32.5 x 22.5 mm; 5-digit 7-segment-main display, digit size 8 mm; 8-digit 14-segment-additional display, digit size 5 mm; 52-segment-bargraph
Current consumption	2-wire: signal output current: max. 22 mA 3-wire: signal output current: max. 30 mA signal output voltage: 7.5 mA (20 mA short circuit) display: + 1 mA
Units	following units can be set at factory: [bar], [mbar], [PSI], [Inch Hg], [cm Hg], [mm Hg], [hPa], [kPa], [MPa], [mH_2O], [Pa], [mmH_2O]
Ingress protection	IP 54
Weight	approx. 165 g
Installation position	vertical [2]
Operational life	100 million load cycles

[2] The devices are calibrated in a vertical position with the pressure port down. If this position is changed on installation there can be slight deviations in the zero point.

Mechanical connections (dimensions in mm)	
Standard	Ø 6.6 x 11 (for flex. tubes Ø 6)
Option	Ø 4.4 x 10 (for flex. tubes Ø 4)

Wiring diagrams

2-wire-system (current)

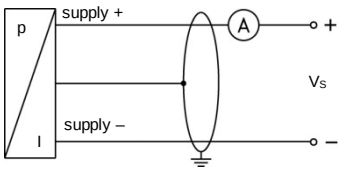

3-wire-system (current / voltage)

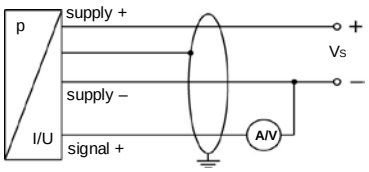

Pin configuration

Electrical connections	terminals 2-wire-system	terminals 3-wire-system
supply +	2 / +	2 / V_S+
supply –	3 / -	3 / V_S-
signal + (only for 3-wire)	1 (not connected)	1 / SIG

Dimensions (mm / in)

without display

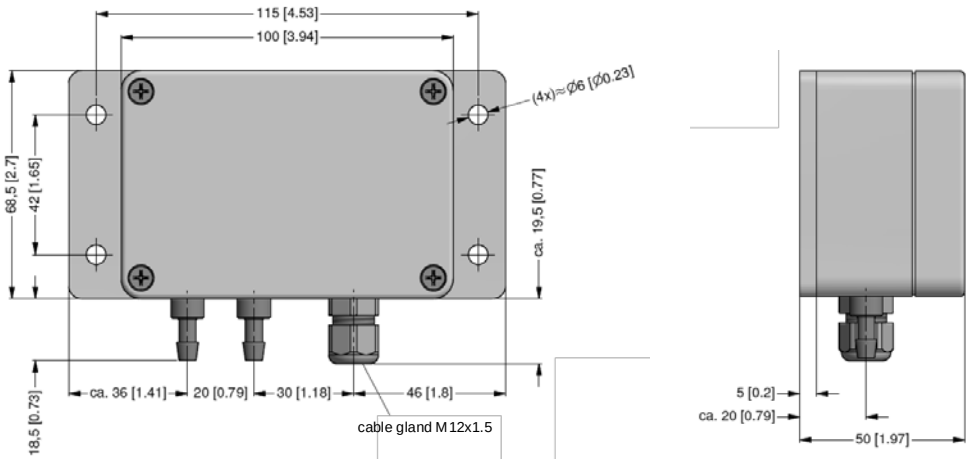

with display

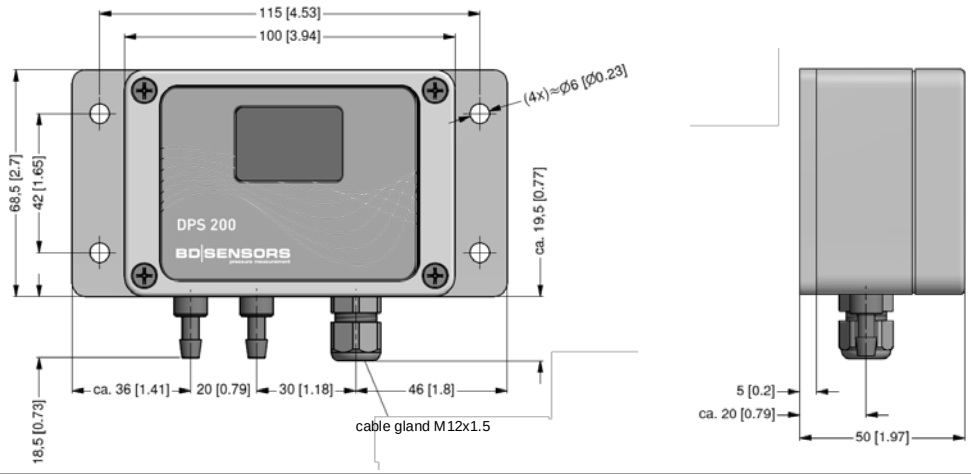

© 2026 BD|SENSORS GmbH – The specifications given in this document represent the state of engineering at the time of publishing. We reserve the right to make modifications to the specifications and materials.

Tel.: +49 (0) 92 35 / 98 11- 0
Fax: +49 (0) 92 35 / 98 11- 11
www.bdsensors.de
info@bdsensors.de

Ordering code DPS 200

DPS 200 □□□-□□□□-□-□-□-□-□-□□□-□-□□□

Pressure																					
differential pressure	8	1	0																		
gauge pressure	8	1	1																		consult
Input	**[mbar]**																				
6				0	0	6	0														
10				0	1	0	0														
16				0	1	6	0														
25				0	2	5	0														
40				0	4	0	0														
60				0	6	0	0														
100				1	0	0	0														
160				1	6	0	0														
250				2	5	0	0														
400				4	0	0	0														
600				6	0	0	0														
1000				1	0	0	1														
customer				9	9	9	9														consult
Output																					
0 … 10 V / 3-wire								3													
4 … 20 mA / 2-wire								1													
4 … 20 mA / 3-wire								7													
customer								9													consult
Accuracy																					
2 % FSO									G												
Display																					
without display										0											
LC display										C											
customer										9											consult
Front foil																					
BD SENSORS											1										
neutral											N										
customer											9										consult
Mechanical connection																					
Ø6.6 x 11 (for flex. tubes Ø6)												Y	0	0							
Ø4.4 x 10 (for flex. tubes Ø4)												Y	0	2							
												9	9	9							consult
Pressure port																					
brass nickel plated															M						
customer															9						consult
Special version																					
standard																0	0	0			
customer																9	9	9			consult

09.01.2026

© 2026 BD|SENSORS GmbH - The specifications given in this document represent the state of engineering at the time of publishing. We reserve the right to make modifications to the specifications and materials.

BD|SENSORS GmbH
BD-Sensors-Straße 1
D - 95199 Thierstein

Tel.: +49 (0) 92 35 / 98 11- 0
Fax: +49 (0) 92 35 / 98 11- 11

www.bdsensors.de
info@bdsensors.de